BUREAU OF INDIAN STANDARDS
DRAFT FOR COMMENTS ONLY

Draft Indian Standard

Double-Capped LED Linear Lamps Part 1 Safety Requirements

First Revision of IS 16614 (Part 1)

Lamps and Related Equipments Sectional Committee, ETD 23	Last date for comments- 19/01/2025

FOREWORD

(Formal clauses of the draft will be added later)

This draft Indian Standard (Part 1) (First Revision) will be adopted by the Bureau of Indian Standards, after the draft finalized by the Lamps and Related Equipments Sectional Committee had been approved by the Electrotechnical Division Council.

This standard was originally published in 2018. The first revision has been undertaken to include the following significant technical changes:

a) Modification in the Group Guideline of Double-capped LED Lamp (*see* Table 1)
b) Addition of photo biological safety hazard testing

Double-capped fluorescent lamps are installed in big volume in office lighting, street lighting, and industrial lighting and for several other applications. Double-capped LED lamps are intended as a possible replacement for G5 or G13-capped fluorescent lamps. This standard deals with safety aspects of tubular LED lamps, which are used in new fittings suitable for double-capped tubular LED lamps and also those replacing double capped tubular fluorescent lamps.

Two different versions of LED lamps in linear tubes can be found in the market: retrofit and conversion.

a) Retrofit LED lamps are lamps which can be inserted in an existing luminaire without modification. This operation is similar to replacing a double capped fluorescent lamp.

b) Conversion LED lamps require modifications in the existing wiring of the luminaire. In this case safety requirements have to be checked in a different way taking into

consideration thermal and electrical behavior of the system and the possibility that the user will insert again a tubular fluorescent lamp.

This standard is based on IEC 62776: 2014 "Double-Capped LED Lamps Designed to Retrofit Linear Fluorescent Lamps -Safety Specification", issued by the International Electrotechnical Commission except for the following modification:

a) Safety and Testing requirements of conversion LED lamps have also been included to make an integral standard;
b) Schedule of type test and acceptance test has been incorporated;
c) Selection of samples incorporated;
d) Conditions of compliances incorporated; and
e) Marking of rated lumen and CCT are added.

For the purpose of deciding whether a particular requirement of this standard is complied with, the final value, observed or calculated, expressing the result of a test or analysis shall be rounded off in accordance with IS 2: 2022 'Rules for rounding off numerical values *(second revision)*. The number of significant places retained in the rounded off value should be the same as that of the specified value in this standard.

Draft Indian Standard

DOUBLE-CAPPED LED LINEAR LAMPS PART 1 SAFETY REQUIREMENTS

(First Revision)

1 SCOPE

This draft Indian Standard (Part 1) (First Revision) specifies the safety and interchangeability requirements, and the exchange operation together with the test methods and conditions, required to show compliance of double-capped LED linear retrofit and conversion lamps, with G5 and G13 caps suitable for use in luminaires, and also intended for replacing fluorescent lamps with the same caps, having:

a) a rated power up to 40 W;
b) a rated voltage of up to 250 V a.c. at 50 Hz or a rated d.c. voltage of up to 250 V; and
c) nominal lengths from 300 mm to 1 500 mm.

NOTES

1 Double-capped LED Linear lamp(s) are commonly known as LED tube light(s).

2 Where in this standard the term 'LED Lamp (s)' is used, it is understood to stand for 'double-capped LED Linear lamp(s)', except where it is obviously assigned to other types of LED lamps.

3 This standard includes photobiological safety.

The performance requirements for lamps under the scope of this standard are covered under IS 16614 (Part 2).

The existing luminaires, into which the double-capped LED retrofit lamps are fitted, can be operated with electromagnetic or electronic control gear.

The requirements of this standard relate to type and acceptance testing.

Recommendations for whole product testing or batchtesting are given in Annex A.

The requirements in this standard are given for general lighting service (excluding for example explosive atmospheres). For lamps for other applications additional requirements may apply.

2 REFERENCES

The standards listed below contain provisions which, through reference in this text, constitute provisions of this standard. At the time of publication, the editions indicated were valid. All standards are subject to revision, and parties to agreements based on this standard are encouraged to investigate the possibility of applying the most recent editions of the standards listed below.

IS Number	*Title*

2418 (Part 1):2018	Tubular fluorescent lamps for general lighting service: part 1 safety requirements (second revision)
2418 (Part 2):2018	Tubular fluorescent lamps for general lighting service: part 2 performance requirements (second revision)
2418 (Part 3): 1977	Tubular fluorescent lamps for general lighting service: dimensions of g-5 and g-13 bi-pin caps (first revision)
2418 (Part 4): 1977	Tubular fluorescent lamps for general lighting service: part 3 go and no-go gauges for g-5 and g-13 bi-pin caps (first revision)
2215:2006	Starter for fluorescent lamps (third revision)
3323:1980	Specification for bi-pin lamp holders for tubular fluorescent lamps (first revision)
8913:1978	Method of measurement of lamp cap temperature rise
10322 (Part 1): 2014	Luminaire: part 1 general requirements and tests (first revision)
IS/IEC 60695-2-10: 2021	Fire hazard testing part 2: glowing hot-wire based test methods section 10: glow-wire apparatus and common test procedure
15885 (Part 1):2011	Safety of lamp controlgears: part 1 general requirements
15885 (Part 2/Sec 13): 2012	Safety of lamp controlgears: part 2 particular requirements, section 13, electronic d.c. or a.c. supplied electronic controlgear for LED modules
16101:2012	General lighting - LEDs and LED modules - terms and definitions
16103 (Part 1):2012	LED modules for general lighting: part 1 safety requirements
16108:2012	Photobiological safety of lamps and lamp systems
16661:2019	Application of IS 16108/IEC 62471 for the assessment of blue light hazard to light sources and luminaires
ISO 4046-4:2016	Paper, board, pulps and related terms — vocabulary part 4: paper and board grades and converted products

3 TERMINOLOGY

For the purposes of this standard, the terms and definitions given in IS 16101, IS 16103 (Part 1) together with the following definitions shall apply:

3.1 Double-Capped Retrofit LED Lamp

Tubular LED linear lamp which can be used as a replacement for double-capped fluorescent lamps without requiring any internal modification in the luminaire and which, after installation, maintains the same level of safety of the replaced lamp in the luminaire.

NOTE— The replacement of a glow starter according to IS 2215 with LED replacement starter having the same dimensions and fit, for the correct functioning of the double-capped LED lamp is not considered as a modification to the luminaire.

3.2 Double-Capped Conversion LED Lamp

Double-capped LED lamp which can be used as a replacement for double capped fluorescent lamps with modification in the luminaire and which, after installation, maintains the same level of safety of the replaced lamp in the luminaire.

3.3 Rated Value

Value of a quantity, used for specification purposes, declared by the manufacturer or responsible vendor and established under standard test conditions.

NOTES

1 To express the "rated value" of a particular quantity, the term "value" is replaced by the quantity name; for example, rated power, rated voltage, rated current, and rated temperature.

2 The standard test conditions are given in this standard.

3.4 Cap Temperature Rise (Δt_s)

Surface temperature rise (above ambient) of the lamp cap.

3.5 Live Part

Conductive part which may cause an electric shock in normal use.

3.6 Type

Double-capped LED lamp, representative of the production.

3.7 Type Test

A test or series of tests made on one or more sample of LED lamp representative of production, for the purpose of checking compliance of the design of a given product with the requirements of the relevant standard.

3.8 Type Test Sample

One or more double-capped LED lamps with similar cap, submitted by the manufacturer or responsible vendor for the purpose of the type test.

3.9 Acceptance Test

Tests carried out on samples taken from a lot for the acceptance of the lot.

3.10 Batch

All the lamps of one type put forward at one time for acceptance test.

3.11 Ultraviolet Hazard Efficacy of Luminous Radiation ($K_{S,v}$)

Quotient of an ultraviolet hazard quantity to the corresponding photometric quantity.

NOTES

1 Ultraviolet hazard efficacy of luminous radiation is expressed in mW/klm.

2 The ultraviolet hazard efficacy of luminous radiation is obtained by weighting the spectral power distribution of the lamp with the UV hazard function $S_{UV}(\lambda)$. Information about the relevant UV hazard function is given in IS 16108. It only relates to possible hazards regarding UV exposure of human beings. It does not deal with the possible influence of optical radiation on materials, such as mechanical damage or discoloration.

4 GENERAL REQUIREMENTS AND GENERAL TEST REQUIREMENTS

4.1 The lamps shall be so designed and constructed that in normal use they function safely causing no danger to the user or surroundings.

In general, compliance is checked by carrying out all the tests specified.

4.2 Following grouping guideline as per Table 1 shall be followed for ensuring the safety compliance.

For each cap type and lamp length, any wattage within the defined range may be tested for compliance of all wattages in the defined range.

Table 1 Group Guideline of Double-Capped LED Lamp
(*Clause* **4.2**)

Sl No.	**Cap Type**	**Lamp Length** (mm)	**Wattage Range** (W)
(1)	(2)	(3)	(4)
i)	G13	600	5-10
ii)	G13	900	10-14
iii)	G13	1 200	13-22
iv)	G13	1 500	20-28
v)	G5	300	3-6
vi)	G5	550	5-10
vii)	G5	850	10-14
viii)	G5	1 150	13-22
ix)	G5	1 450	20-28

4.3 Double-capped LED linear lamps shall normally not be opened for tests. In the case of doubt based on the inspection of the lamp and the examination of the lamp circuit diagram, and in agreement with the manufacturer or responsible vendor, lamps shall be specially prepared so that a fault condition can be simulated and shall be submitted for testing (*see* **13**). Opened lamps or inspection of internal component parts of the lamp may be required to verify conformity with **11**, **12** and **14** of this standard.

In general, all tests are carried out on each type of lamp or, where a range of similar lamps is involved, for each power in the range or on a representative selection from the range, as agreed with the manufacturer.

4.4 When the lamp fails safely during one of the tests, it is replaced, provided that no fire, smoke or flammable gas is produced. Further requirements on failing safe are given in **13**.

4.5 Internal wiring shall be carried out as in 5.3 of IS 10322 (Part 1).

4.6 For construction of the electrical circuit, reference shall be made to 15.1 and 15.2 of IS 15885 (Part 1) and for other parts, 4.11, 4.12 and 4.25 of IS 10322 (Part 1) shall apply.

5 MARKING

5.1 Marking on the Lamp

Lamps shall be clearly and durably marked with the following markings, the size of which shall be *Min* 2 mm for letters/numbers and 5 mm for symbols:

a) Mark of origin (this may take the form of a trademark, the manufacturer's name or the name of the responsible vendor).

b) Country of Manufacture.
c) Rated voltage or voltage range (marked “V” or “volts”).

NOTE— The rated voltage or voltage range of the lamp can differ from the open circuit voltage.

d) Rated power (marked “W” or “watts”);
e) Rated frequency (marked in “Hz” or “kHz”);
f) Rated luminous flux (marked in “lumen”);
g) Rated CCT (marked in “K”); and
h) Double-capped LED lamps suitable to be used in combination with some type of ballast only (for example with magnetic ballast) shall be marked with the symbol as in Fig. 1 and / or Fig. 2.

Fig. 1 Lamp Suitable for High Frequency Operation

Fig. 2 Lamp Suitable for 50 Hz Operation

i) Double-capped LED lamps (conversion type) suitable for use by directly connecting to mains voltage and in luminaires which may require re-wiring shall be marked with the symbol as in Fig. 3. The power input terminals should be clearly marked as “L” and “N” on the lamp cap.

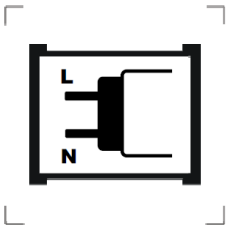

Fig. 3 Lamp Suitable for Rated Voltage Operation

j) Provide information on the ingress of dust and water.

For lamps that should be used in dry conditions or in a luminaire that provides protection against water drops, *see* Fig. 4.

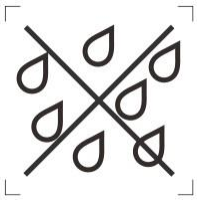

Fig. 4 Lamp to be Used in Dry Conditions or in a Luminaire that Provides Protection Against Water Drops

k) Double-capped LED lamps shall be marked according to Fig. 5 and with the following information: “This lamp is not suitable to be used in emergency luminaires designed for double-capped fluorescent lamp (s)”.

Fig. 5 Lamps Not Suitable for Emergency Operation

l) If double-capped LED lamps need to be used with components which replace the starter, they shall be marked with the type reference of the LED replacement starter. The LED replacement starter shall be marked as in Fig. 6.

Fig. 6 LED Replacement Starter

m) Rated ambient temperature range of the lamp.

5.2 Marking on the Lamp, the Immediate Lamp Wrapping (or Container) or in Instructions

In addition, the following information shall be given by the lamp manufacturer on the lamp or immediate lamp wrapping or container or in the installation manual.

Explanation of Fig. 7, Fig. 8 and Fig. 9 shall be given in the installation manual.

a) Rated current (marked “A” or “ampere”); and
b) Warning Sticker on the Double-capped LED lamps as given below:

Luminaire once fitted with LED Lamp shall not be used again with Flouroscent/Conventional Lamp

Fig. 7 Installation Manual

c) Special conditions or restrictions which shall be observed for lamp operation, for example operation in dimming circuits. Where lamps are not suitable for dimming, the lamps shall be marked according to Fig. 8.

Fig. 8 Dimming not Allowed

5.3 Instruction Manual

5.3.1 *General*

In addition to the information listed in **5.2**, double-capped LED lamps shall be accompanied by instructions, describing all necessary steps / connection diagram for the replacement of the fluorescent lamp with a LED lamp, such as replacement of the starter, modification of internal wiring in the luminaire. This can be either depicted graphically as in **5.3.3** or as a step by step instruction set as in **5.3.4**.

All required instructions detailed by this safety standard shall be given either on the lamp, on the product packaging or in the manufacturer’s instructions provided with the lamp. The meaning of the symbols shown in **5.1** and **5.2** should be clearly explained (using words) in the instruction manual.

NOTE — The instruction manual shall be written in English, Hindi and any other local languages where the lamp is sold and be made available via product data sheets, leaflets or website

The content of the instructions shall include the following:

5.3.2 *Declaration of the Product*

The provisions given under the following items (a) to (e) shall be supplied by the manufacturer:

a) A List of all parts supplied shall be provided;
b) Type of the fluorescent lamp that the LED lamp is designed to replace shall be declared;
c) For retrofit lamps, provide a warning that no modification of the luminaire is required;

NOTE — Change of Starter is not considered as a modification.

d) For conversion type of lamp, provide a warning that modification in the wiring of the luminaire is required;

e) The ambient temperature range for which the lamp is rated shall be declared. Where the *Min* ambient temperature of the range is higher than –10°C or the *Max* ambient temperature of the range lower than +50°C the instruction manual for the lamp shall contain the following information:

"This lamp may not be suitable for use in all applications where a traditional fluorescent lamp has been used. The temperature range of this lamp is more restricted. In cases of doubt regarding the suitability of the application, the manufacturer of this lamp should be consulted"; and

NOTE — This standard is based on the assumption that the normal expected ambient temperature range of the fluorescent lamps that may be replaced by these products is –10°C to +50°C.

f) Provide the following information in the form of a declaration:

"This lamp is designed for general lighting service (excluding for example explosive atmospheres)".

5.3.3 *Graphical Instruction*

The graphical instruction can be used instead of the instruction steps given in **5.3.4**. Indicative graphical instructions for changing the fluorescent lamp in a luminaire with a retrofit or conversion LED lamp is given below:

5.3.3.1 The steps for applying the product to an existing luminaire with magnetic ballast shall be as given in Fig. 9. If no starter replacement is needed, steps 4 and 5 in Fig. 9 and in **5.3.4** are omitted.

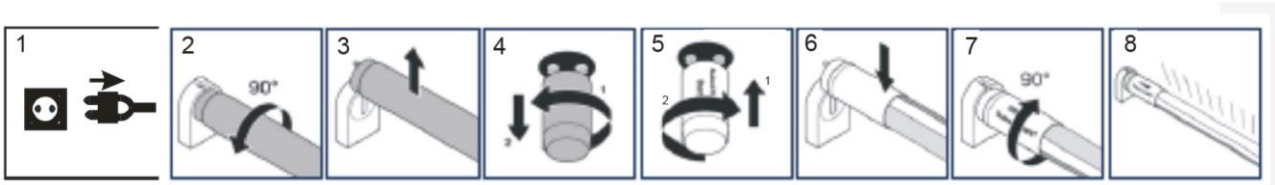

Fig. 9 Schematic Steps of Removing a Fluorescent Lamp and Inserting a Double-Capped LED Lamp Designed to Retrofit Linear Fluorescent Lamp

5.3.3.2 The steps for applying the product to a luminaire where rewiring is required shall be as given in Fig.10.

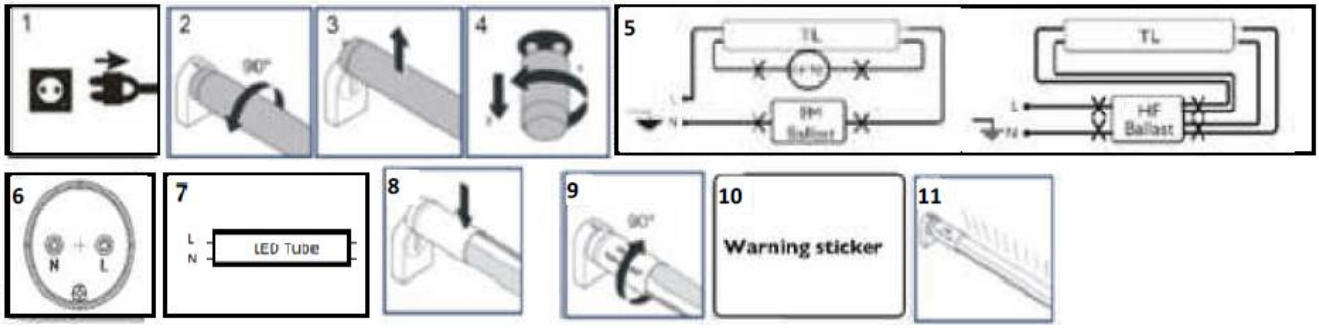

Fig. 10 Schematic Steps of Removing a Fluorescent Lamp and Inserting a Double-Capped LED Lamp Designed to Conversion Linear Fluorescent Lamp

5.3.4 *Mounting*

This clause can be used instead of **5.3.3**. Describe the steps needed in line with the graphical instruction in Fig. 9 and Fig. 10.

Example for a retrofit version is as given below (*see* Fig. 9):

a) Switch off electricity;
b) Remove the conventional lamp;
c) Remove the starter;
d) Click the LED replacement starter into the starter holder;
e) Insert the LED lamp into the lamp holder;
f) Secure the position by turning the lamp by 90°; and
g) Switch on electricity and check for lamp starting.

Example for a conversion version is as given below (*see* Fig. 10):

a) Switch off electricity;
b) Remove the conventional lamp;
c) Remove the starter if present;
d) Disconnect all the wires of the magnetic ballast and starter if connection exists / Disconnect all the wires of the electronic ballast if connection exists;
e) Check the “L” and “N” terminals as marked on the LED tube;
f) Connect the incoming power terminals to the lamp holder where “L” and “N” of the LED tube will be connected;
g) Insert the LED lamp into the lamp holder;
h) Secure the position by turning the lamp by 90°;
i) Attach the warning sticker “This luminaire has been modified to suit conversion LED lamp” at a suitable place visible inside the luminaire; and
j) Switch on electricity and check for lamp starting.

5.4 Compliance

Compliance with **5.1** to **5.3** is checked by the following:

Presence and legibility of the marking shall be by visual inspection.

The durability of the marking as far as applied on the lamp is checked by trying to remove it by rubbing lightly for 15 s with a piece of cloth soaked with water and, after drying, for a further 15 s with a piece of cloth soaked with hexane. The marking shall be legible after the test.

Availability of information required in **5.2** and **5.3** shall also be checked by visual inspection.

5.5 BIS Certification Marking

The LED lamp(s) conforming to the requirements of this standard may be certified as per the conformity assessment schemes under the provisions of the *Bureau of Indian Standards Act, 2016* and the Rules and Regulations framed thereunder, and the LED lamp(s) may be marked with the Standard Mark.

6 INTERCHANGEABILITY

6.1 Interchangeability of the Cap

Interchangeability shall be ensured by the use of caps in accordance with IS 2418 (Part 3) and gauges as per IS 2418 (Part 4). Compliance is checked by the use of the relevant gauges as given in Table 2.

Table 2 Interchangeability Gauges and Lamp Cap Dimensions
(*Clause* **6.1**)

Sl No.	Lamp Cap	Cap Sheet Table in IS 2418 (Part 3)	Cap Dimensions to be Checked by the Gauge	Gauge Sheet Table in IS 2418 (Part 4)
(1)	(2)	(3)	(4)	(5)
i)	G 5	Table 1	All dimensions to be checked	Table 1 and 2
ii)	G 13	Table 2	All dimensions to be checked	Table 3 and 4

If double-capped LED lamps need to operate in combination with a LED replacement starter which replaces the glow starter, this LED replacement starter shall be supplied together with the lamp. This device shall comply with dimensions, mechanical and thermal tests required in IS 2215.

6.2 Mass

The total mass of the lamp shall not exceed 200 g for a G5 capped lamp and 500 g for G13 capped lamp.

Compliance is checked by weighing the lamp.

6.3 Dimensions

6.3.1 *Requirements*

The length of the lamp shall not change significantly within the specified ambient temperature range of the lamp.

Compliance is checked by the tests in **6.3.2** to **6.3.6.**

NOTE— For the purpose of this standard, the *Min* and *Max* temperature range for fluorescent lamps has been assumed to be –10°C to +50°C. Lamp lengths critical for stress at the holders at elevated temperatures and critical for contact making at lowered temperatures are considered.

6.3.2 *Dimensions at 27 °C (non-operating)*

Double-capped LED lamps for use in fluorescent luminaires shall comply with the dimensions and tolerances of the corresponding lamps as defined in IS 2418 (Part 2) at 27°C. The lamp dimension as specified in IS 2418 (Part 2) datasheet shall be measured. Resulting dimensions shall be noted as $A_{27°C}$, $B_{27°C}$, $C_{27°C}$ and $D_{27°C}$.

Compliance is checked by inspection.

NOTE— Designation A, B and C and D refer to IS 2418 (Part 2).

6.3.3 *Variation of Dimension a Due to Self-Heating at 27°C*

The lamp is placed in a draught free environment and operated at its rated supply voltage. Dimension *A* is measured after the lamp is stabilised and noted as $A_{operating}$. The difference in length is calculated from the value measured in this operating state:

$$\Delta A = A_{operating} - A_{27°C}$$

When stable conditions have been reached, the surface temperature on the lamp shall not exceed the value in **6.4.1**.

6.3.4 *Dimension B at Minimum Ambient Temperature*

The lamp is placed in a climate chamber at the *Min* ambient temperature i.e. –20°C, or at the *Min* specified ambient temperature (t_{min}). After having attained the temperature (t_{min}) for 1 h (u.c), the lamp is taken off the climate chamber and the length of the lamp is measured immediately. Care has to be taken that during measurement no significant change of temperature of the lamp occurs.

The temperature of the lamp is recorded during the length measurement of dimension B. The value at *Min* of the rated temperature range shall be considered for compliance and noted as B_{tmin}.

6.3.5 *Dimension A at Maximum Ambient Temperature*

The lamp is placed in the climate chamber at the *Max* ambient temperature, i.e. +50°C or at the *Max* specified ambient temperature, t_{max}. After having attained the temperature t_{max} for 1 h (u.c.), the lamp is taken off the climate chamber and the length of the lamp is measured immediately. Care has to be taken that during measurement no significant change of temperature of the lamp occurs. The temperature of the lamp is recorded during the length measurement, after having taken it off from the climate chamber. The length *A* at the *Max* of the rated ambient temperature range shall be noted as A_{tmax}.

6.3.6 *Compliance*

The following formulae apply:

$A1 = A_{tmax} + \Delta A - A_{27°C} (t_{max} - 27\ °C)\ .11.7 \times 10^{-6}$
$B1 = B_{tmin} - A_{27°C} (t_{min} - 27\ °C)\ .11.7 \times 10^{-6}$

Compliance is checked as follows:

a) Dimension A1 shall be within the limits of the corresponding dimensions according to the relevant lamp data sheet given in IS 2418 (Part 2).

b) Dimension B1 shall be within the limits of the corresponding dimensions according to the relevant lamp data sheet given in IS 2418 (Part 2).

NOTE— Acceptable length variation of the LED lamp is based on thermal expansion of a general luminaire construction assuming a steel tray construction for mounting the lamp holders and having a thermal expansion coefficient of 11.7×10^{-6}/°C.

6.4 Temperature

6.4.1 *Temperature Requirement*

Except the lamp caps, the LED lamp temperature shall not be higher than 75 °C measured on any location of the lamp. The requirement applies for lamp surfaces which can be touched with a test finger.

6.4.2 *Power Requirement*

The power consumed by the LED lamp shall not be higher than that of the fluorescent lamp that it replaces as described in IS 2418 (Part 2).

6.4.3 *Compliance*

The lamp is measured positioned horizontally at 27 °C ambient temperature in free air. For details of this test set-up, *see* Annex B, IS 2418 (Part 1). The lamp under test shall consist of a complete unit, operated at its rated supply voltage. When stable conditions have been reached, the *Max* surface temperature on the lamp and the power consumed shall be measured. These shall not exceed the values in **6.4.1** and **6.4.2**.

6.5 Safety of the Lamp in Case a Wrong Starter-Lamp Combination is Used

The following combinations shall be tested:

a) Fluorescent starter with LED lamp;
b) LED replacement starter with fluorescent lamp;
c) One fluorescent lamp replaced by a LED lamp in case of two fluorescent lamps connected in series with the same controlgear, for example, 2 x 18 W and equipped with starter and LED replacement starter replacing the starter shall show compliance for all possible combinations. For LED replacement starter which replace starter with a short circuit (e.g. a fuse) or open circuit, the test of the combination with "LED replacement starter with fluorescent lamp", is not required.

If lamps are marked with a voltage range, rated voltage is taken as the *Max* of the voltage range marked unless the manufacturer declares another voltage as the most critical one.

Compliance:

Same as **13.6**, repeated below:

During the tests **13.2** to **13.5**, the lamp shall not catch fire, or produce flammable gases or smoke and live parts shall not become accessible.

To check if gases liberated from component parts are flammable or not, a test with a high frequency spark generator is made.

To check if accessible parts have become live, a test in accordance with **8.2** is made.

After testing according to **13.2** to **13.5**, the lamp shall meet the insulation resistance requirements of **8.3**.

7 PIN-SAFETY DURING INSERTION

G5 and G13 lamp caps do not assure the insertion of both ends of the lamp simultaneously, for this reason there shall not be any electrical continuity between the two ends of the lamp during the insertion.

With the lamp pins inserted into only one lampholder, the voltage present at the un-inserted pins shall not be capable of causing an electric shock. The basic insulation during lamp insertion as specified in clause 8 of IS 10322 (Part 1) shall be considered adequate.

An accessible protection measure that may accidentally be deactivated and hereby deactivate the protection against electric shock is not permissible.

NOTE— An accessible protective measure could be a button that closes a switch, when the lamp is fully mounted.

Compliance is checked by the following tests:

Electric Strength Test - based on possibility of 250 V on the lampholder during insertion, the electric strength test shall be conducted with 1 500 V (2 U + 1 000 V) between both ends of the lamp. Initially, no more than half the voltage is applied between the pins or contacts of one cap and the pins or contacts of the other cap. It is then gradually raised to the full value. No flashover or breakdown shall occur during the test.

Insulation Resistance - measured with about 500 V d.c. the *Min* resistance shall be 2 MΩ

For creepage distances and clearance, Table 7 of IS 15885 (Part 1) shall be applied based on 250 V working voltage including mains supply transients.

Creepage distances shall not be less than the required *Min* clearance.

The test for touch current shall be carried out by applying a test voltage of 500 V r.m.s. 50 Hz, the touch current shall not exceed 0.7 mA peak when measured in accordance with Fig. 11.

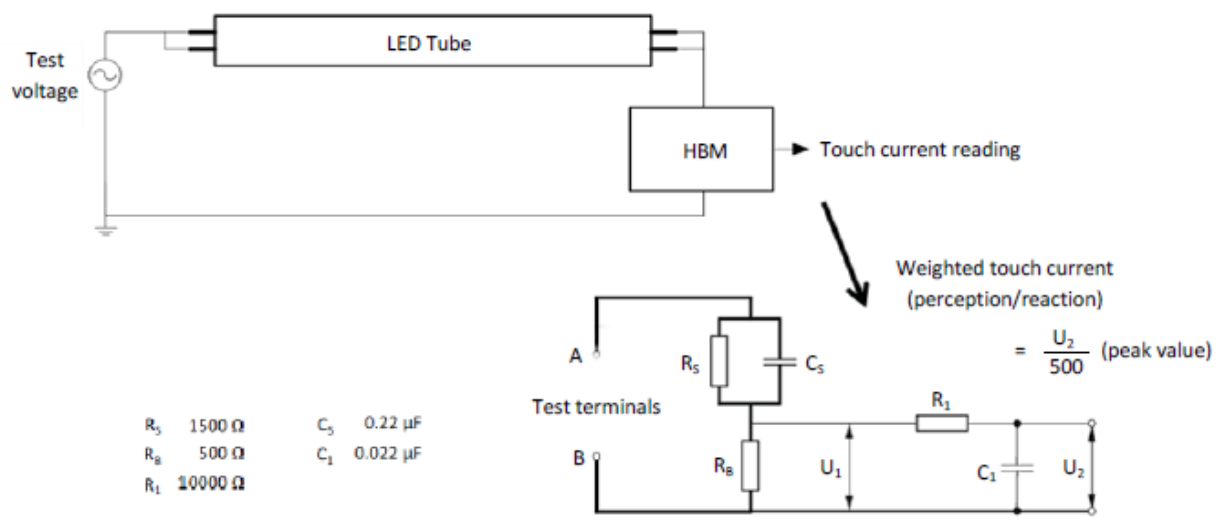

Key
HBM = Human Body Model, for explanation *see* IS 10322 (Part 1), Annex G.

Fig. 11 Test Configuration for Touch Current Measurement

8 PROTECTION AGAINST ACCIDENTAL CONTACT WITH LIVE PARTS

8.1 General

Insulation resistance and electric strength shall be adequate between live parts of the lamp and accessible parts of the lamp. Concerning caps, the requirements of 4.4 and 4.5 of IS 2418 (Part 1) shall apply. For the other parts of the lamp, the following requirements apply.

8.2 Test to Establish Whether a Conductive Part May Cause an Electric Shock During Operation

The lamps shall be so constructed that, without any additional enclosure in the form of a luminaire, the following parts are not accessible when the lamp is installed in a lamp holder according to the relevant lamp holder data sheet specified in IS 3323.

a) Internal metal parts;
b) Basic insulated external metal parts other than caps;
c) Live metal parts of the lamp cap; and
d) Live metal parts of the lamp itself.

The accessibility is checked with a test finger specified in Fig. 12, with a force of 10 N.

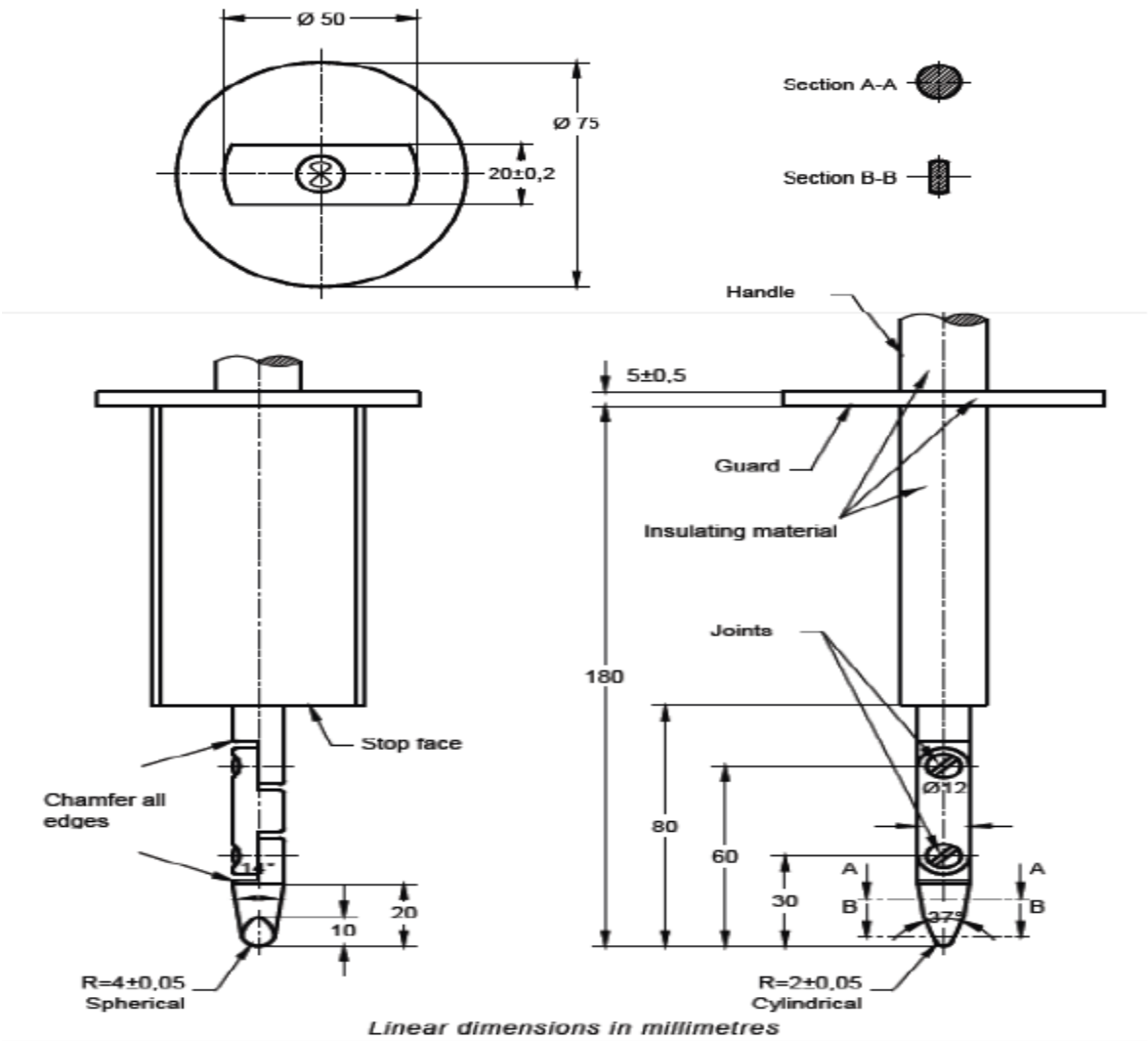

Material: metal, except where otherwise specified
Tolerances on dimensions without specific tolerance:

On angles:	on linear dimensions:	
+ 0 °	upto 25 mm: $^{+0\ mm}_{-0.05\ mm}$	Over 25 mm: ± 0.2 mm
- 10 '		

Both joints shall permit movement in the same plane and the same direction through an angle of 90° with a 0° to +10° tolerance.

Fig. 12 Standard Test Finger (According to IS/IEC 60529)

External metal parts other than current-carrying metal parts of the cap shall not be or become live. For testing, any movable conductive material shall be placed in the most onerous position without using a tool.

Compliance to check whether accessible parts have become live, the tests in accordance with Annex A of IS 15885 (Part 1) shall be carried out. During testing the lamp is operated on a reference circuit as described in IS 2418 (Part 2).

8.3 Insulation Resistance

The lamp shall be conditioned for 48 h in a cabinet containing air with a relative humidity between 91 % and 95 %. The temperature of the air is maintained within 1°C of any convenient value between 20 °C and 30 °C.

Insulation resistance shall be measured in the humidity cabinet or immediately after removing from the cabinet, with a d.c. voltage of approximately 500 V, 1 min after application of the voltage.

The insulation resistance between live parts of the cap and accessible parts of the lamp (accessible parts of insulating material are covered with metal foil) shall be not less than 4 MΩ.

8.4 Electric Strength

Immediately after the insulation resistance test, the same parts as specified above shall withstand a voltage test for 1 min with an a.c. voltage or a d.c. voltage equal to the peak voltage of the prescribed a.c. voltage as follows:

The use of a.c. or d.c. voltage is to be advised by the manufacturer.

NOTE— The electric strength test with an equivalent d.c. voltage is under consideration.

During the test, the supply contacts of the cap are short-circuited. Accessible parts of insulating material of the lamp are covered with metal foil. Initially, no more than half the voltage prescribed in Table 10.2 of IS 10322 (Part 1) for double or reinforced insulation is applied between the contacts and the metal foil or accessible conductive parts. It is then gradually raised to the full value. Care shall be taken that the metal foil is so placed that no flashover occurs at the edges of the insulation.

No flashover or breakdown shall occur during the test. Measurements shall be carried out in the humidity cabinet or immediately after removing from the cabinet.

9 MECHANICAL REQUIREMENTS FOR CAPS

9.1 Construction and Assembly

Caps shall be so constructed and assembled to the tubes that they remain attached during and after operation.

Compliance is checked by the tests given in **9.2** to **9.4**.

9.2 Torque Test for Unused Lamps

For unused lamps, compliance is checked by applying a torque to the lamp cap pins, as follows:

The lamp cap shall remain firmly attached to the tube and there shall be no rotational movement between component parts of the cap exceeding an angular displacement of 6° when subjected to the torque specified in Table 3.

Table 3 Torque Values for Unused Lamps
(*Clause* **9.2**)

Sl No.	Cap type	Torque value (Nm)
(1)	(2)	(3)
i)	G 5	0.5
ii)	G 13	1.0

The torque shall not be applied suddenly, but shall be increased progressively from zero to the value specified in Table 3.

The test holder for the application of the torque is shown in Annex A of IS 2418 (Part 1).

In case of lamps with adjustable caps, before applying the torque test, the lamp cap shall be rotated to its extreme positions. Both extreme positions shall be tested.

9.3 Torque Test after Heat Treatment

LED lamps having a crimp, screw or similar mechanical connection used for fixing the cap to the tube, are exempt from this clause.

Following a heating treatment for a period of 2 000 h ± 50 h at a temperature of 80 °C ± 5 °C, the cap shall remain firmly attached to the tube and there shall be no rotational movement between the component parts of the cap exceeding an angular displacement of 6° when subjected to the torque levels specified in Table 4. In case of other kind of fixation of the cap of the tube than that used for fluorescent lamps, a shorter heating period down to 100 h, is allowed. The effect of adhesive materials connecting cap and tube shall be as rigid as the adhesive material used for fluorescent lamps.

NOTE— The heating time, the properties of other kind of fixation of the cap, for example with adhesives and its application procedure are under consideration.

In case of lamps with adjustable caps, before applying the torque test, the lamp cap shall be rotated to its extreme positions. Both extreme positions shall be tested.

Table 4 Torque Values After Heating Treatment
(*Clause* **9.3**)

Sl No.	Cap Type	Torque Value (Nm)*

(1)	(2)	(3)
i)	G 5	0.3
ii)	G 13	0.6
*under consideration		

9.4 Repetition of 8.2

After the mechanical strength test, the sample shall comply with the requirements of accessibility (*see* **8.2**).

10 CAP TEMPERATURE RISE

Lamp cap temperature rise is checked by the test set-up specified in Annex B of IS 2418 (Part 1).

Compliance:

The lamp cap temperature rise above ambient temperature shall not exceed 95 ˚C.

11 RESISTANCE TO HEAT

The lamp shall be sufficiently resistant to heat. External parts of insulating material providing protection against electric shock, and parts of insulating material retaining live parts in position shall be sufficiently resistant to heat.

Compliance is checked by subjecting the parts to a ball-pressure test by means of the apparatus shown in Fig. 13.

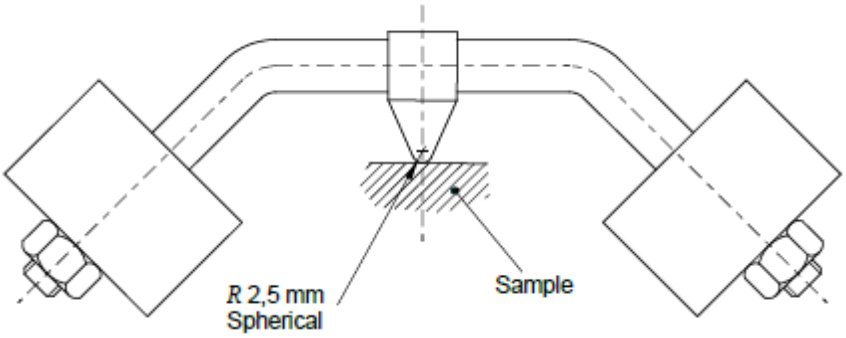

Fig. 13 Ball-Pressure Test Apparatus

The test is made in a heating cabinet at a temperature of (25 ± 5) °C in excess of the operating temperature of the relevant part according to **10**, with a *Min* of 125°C for parts retaining live parts in position and 75 °C for other parts. The surface of the part to be tested is placed in the horizontal position and a steel ball of 5 mm diameter pressed against this surface with a force of 20 N.

The test load and the supporting means are placed within the heating cabinet for a sufficient time to ensure that they have attained the stabilized testing temperature before the test commences.

The part to be tested is placed in the heating cabinet, for a period of 10 min, before the test load is applied.

The surface where the ball presses should not bend, if necessary the surface shall be supported. For this purpose, if the test cannot be made on the complete specimen, a suitable part may be cut from it.

The specimen shall be at least 2.5 mm thick, but if such a thickness is not available on the specimen, then two or more pieces are placed together.

After 1 h, the ball is removed from the specimen, which is then immersed for 10 s in cold water for cooling down to approximately room temperature. The diameter of the impression is measured, and shall not exceed 2 mm.

In the event of curved surfaces, the shorter axis is measured if the indent is elliptical.

In case of doubt, the depth of the impression is measured and the diameter calculated using the following formula:

$$\Phi = 2\sqrt{p\,(5-p)}$$

where,

$p =$ depth of impression.

The test is not made on parts of ceramic material.

12 RESISTANCE TO FLAME AND IGNITION

Parts of insulating material retaining live parts in position and external parts of insulating material providing protection against electric shock are subjected to the glow-wire test in accordance with IS/IEC 60695-2-10 subject to the following details:

The test specimen is a complete lamp. It may be necessary to take away parts of the lamp to perform the test, but care is taken to ensure that the test conditions are not significantly different from those occurring in normal use.

The test specimen is mounted on the carriage and pressed against the glow-wire tip with a force of 1 N, preferably 15 mm, or more, from the upper edge, into the centre of the surface to be tested. The penetration of the glow-wire into the specimen is mechanically limited to 7 mm.

If it is not possible to make the test on a specimen as described above because the specimen is too small, the above test is made on a separate specimen of the same material, 30 mm^2 and with a thickness equal to the smallest thickness of the specimen.

The temperature at the tip of the glow-wire is 650 °C. After 30 s, the specimen is withdrawn from contact with the glow-wire tip.

The glow-wire temperature and heating current are constant for 1 min prior to commencing the test. Care shall be taken to ensure that heat radiation does not influence the specimen during this period. The glow-wire tip temperature is measured by means of a sheathed fine-wire thermocouple constructed and calibrated as described in IS 11000 (Part 2/Sec 1).

Any flame or glowing of the specimen shall extinguish within 30 s of withdrawing the glow-wire, and any flaming drop shall not ignite a piece of the tissue paper, spread out horizontally 200 ± 5mm below the specimen. The tissue paper is specified in 4.187 of ISO 4046-4.

The test is not made on parts of ceramic material.

13 FAULT CONDITIONS

13.1 General

Lamps, both dimmable and non-dimmable, shall not impair safety when operated under fault conditions which may occur during the intended use. Each of the following fault conditions is applied in turn, as well as any other associated fault condition that may arise from them as logical consequence.

13.2 Testing Under Extreme Electrical Conditions

If lamps are marked with a voltage range, the voltage at which they are tested is taken as the *Max* of the voltage range marked unless the manufacturer declares another voltage as the most critical one. The lamp is switched on at ambient temperature [*see* IS 16101 and the ambient conditions given in H.1 of IS 15885 (Part 1)] and adjusted to the most critical electrical conditions as indicated by the manufacturer or the power is increased until 150 % of the rated power is reached. The test is continued until the lamp is thermally stabilized. A stable condition is reached, if the lamp cap temperature does not change by more than 1˚C in 1 h (*see* IS 8913). The lamp shall withstand the extreme electrical conditions for at least 15 min, after stabilization is reached.

A lamp which either withstands the extreme electrical conditions for 15 min or fails safe, has passed the test.

If the lamp contains an automatic protective device or circuit which limits the power, it is subjected to a 15 min operation at this limit. If the device or circuit effectively limits the power over this period, the lamp has passed the test, provided the compliance (*see* **4** and **13.6**) is fulfilled.

13.3 Short-circuit Across Capacitors

Only one component at a time is subjected to a fault condition.

13.4 Fault Conditions across Electronic Components

Open or bridge points in the circuit where such a fault condition may impair safety.

Only one component at a time is subjected to a fault condition.

13.5 Compliance

During the tests **13.2** to **13.5** the lamp shall not catch fire, or produce flammable gases or smoke and live parts shall not become accessible.

To check if gases liberated from component parts are flammable or not, a test with a high-frequency spark generator is made.

To check if accessible parts have become live, a test in accordance with **8.2** is made.

After testing according to **13.2** to**13.5**, the lamp shall meet the insulation resistance requirements of **8**.**3**.

For retrofit version, to avoid any overheating of the ballast into the luminaire, during any of the above mentioned fault conditions, the impedance of the lamp shall be checked by measuring the voltage and the current across the lamp. The total impedance of the lamp in stable condition shall not be lower than the values indicated in Table 5 below for the corresponding fluorescent lamp parameters.

Table 5 Minimum LED Lamp Impedances
(*Clause* **13.5)**

Sl No.	**Cap Type**	**Lamp Length** (mm)	**Impedance** (Ω)
(1)	(2)	(3)	(4)
i)	G 13	600	50.0
ii)	G 13	900	40.0
iii)	G 13	1 200	40.0
iv)	G 13	1 500	25.0
v)	G 5	300	140.0
vi)	G 5	550	60.0
vii)	G 5	850	60.0
viii)	G 5	1 150	60.0
ix)	G 5	1 450	60.0

Overload due to rectifications of the supply current of the ballast in the luminaire, shall be prevented. During any of the above mentioned fault conditions the peak value of the positive semi waveform of the supply current shall be measured and compared with the peak of the negative semi waveform. The difference between the two values shall in stable conditions be less than 30 % of the *Max* value. However, it is regarded in compliance, if, in single fault conditions, steady-state r.m.s. current through the lamp stays lower than the r.m.s. current of the corresponding fluorescent lamp in normal condition.

13.6 Additional Requirements

In addition to the fault conditions described in **13.2** to **13.5**, fault conditions **14.2** and **14.4** of IS 15885 (Part 1) and the additional tests in **13.7** are carried out.

13.7 Safety of the Lamp with Different Types of Controlgear

It shall be safeguarded that a LED lamp with G5 and G13 caps can be operated safely in a luminaire designed for a conventional fluorescent lamp with the same dimensions and with any type of controlgear.

Compliance shall be checked by carrying out the following tests:

The LED lamp shall be inserted in a circuit with magnetic ballast designed to supply a conventional fluorescent lamp with the same dimensions. The ballast shall comply with IS 15885 (Part 2/Sec 8) and suitable for the corresponding fluorescent lamp. The ballast shall be designed for the supply voltage marked on the LED lamp.

The LED lamp shall be inserted into a circuit specified in IS 2418 (Part 2). The supply voltage and the resistor shall be the rated voltage and resistance of the HF reference or measurement ballast on the lamp data sheet. For fluorescent lamps with reference condition given at 50 Hz and no HF measurement ballast, the HF ballast reference resistor value is calculated following $R = U_{lamp}^2/P_{lamp}$. The test voltage is calculated as twice the specified lamp voltage at 50 Hz.

The free pins of each cap of the lamp (if any) are connected together or left open choosing the most unfavourable condition.

If the LED lamp is intended to replace a range of fluorescent lamps, the *Max* of the rated power of the fluorescent lamps and the *Max* rated voltage shall be used for the test.

13.8 Compliance for Test with Different Types of Controlgears

During the tests of **13.7** the lamp shall not catch fire, or produce flammable gases or smoke and live parts shall not become accessible.

To check if gases liberated from component parts are flammable or not, a test with a high-frequency spark generator is made.

To check if accessible parts have become live, a test in accordance with **8.2** is made.

After testing according to **13.8**, the lamp shall meet the insulation resistance requirements of **8.3**.

Low impedance between pins of one cap may lead to overheating of the cathode heating transformer in the rapid start controlgear. In order to avoid this effect, the current that runs between the pins shall not be greater than 0.51 A, when a voltage of 3.6 V is applied to the pins of a cap. Measurement of the current shall be made within 3s to 10 s after the application of the voltage.

13.9 Safety of Lamp in case the Luminaire Controlgear Short Circuits

LED tubular lamps when used according IS 2418 (Part 2) shall be tested on 250 V with both the ballast and starter short-circuited. The tests of **8** shall be conducted thereafter. If the lamp fails as a consequence of the controlgear short circuit, it shall meet the requirements of **13.8**.

14 CREEPAGE DISTANCES AND CLEARANCES

The requirements of IS 15885 (Part 1) shall apply together with the following additional requirements.

The *Min* creepage distance between contact pin(s) or contacts and the metal shell of the cap shall be in accordance with the requirements given in relevant lamp data sheet given in IS 2418 (Part 3).

For other parts of the lamp, the creepage distance and clearance requirements of IS 15885 (Part 1) are applicable. For accessible conductive parts (excluding the cap) the requirements of IS 10322 (Part 1) for double or reinforced insulation apply.

Compliance is checked by measurement in the most onerous position.

15 LAMPS WITH PROTECTION AGAINST DUST AND MOISTURE

15.1 General

Where the lamp is not marked according to Fig. 4 (for use in dry conditions or in a luminaire that provides protection), the tests under **15.2** and **15.3** shall be conducted.

15.2 Thermal Endurance

Thermal endurance preconditioning shall be conducted according to 12.3 of IS 10322 (Part 1) for a period of 240 h. The lamp shall be operated at an ambient temperature specified in **5.3.2**, giving a lamp temperature 10˚C above *Max* rating.

Compliance:

After the test, the LED lamp shall be visually inspected. It shall not have become unsafe (according to **4.4)** and the marking shall be legible.

15.3 Ingress Protection Testing

The IP test according to IS 10322 (Part 1) for IP X5 and IP 6X shall be conducted on the same lamp that was subjected to the thermal endurance test before. During this testing, lamp holders sealing to the diameter of the lamp ends and providing protection to the contact area of IP 65 shall be fitted.

Compliance shall be checked as specified in 9.2 of IS 10322 (Part 1).

16 PHOTOBIOLOGICAL HAZARD

16.1 UV Radiation

The ultraviolet hazard efficacy of luminous radiation of an LED lamp shall not exceed 2 mW/klm.

Compliance is checked by measurement of the spectral power distribution and subsequent calculation of the ultraviolet hazard efficacy of luminous radiation.

LED lamps not relying on the conversion of UV radiation are expected to not exceed the *Max* allowed ultraviolet hazard efficacy of luminous radiation. They do not require measurement.

16.2 Blue Light Hazard

The blue light hazard shall be assessed according to IS 16661, which shall be regarded as normative when testing LED lamps to this standard. LED lamps shall be classified as risk group 0 unlimited or risk group 1 unlimited. For lamps with small light sources according to IS 16661the requirement can be fulfilled if a true radiance measurement (*see* IS 16661) shows that the limit of 10 000 (W/(m^2·sr) is not exceeded.

NOTE — Clause C.2 of IS 16661 gives a method to classify lamps where full spectral data is not available.

16.3 Infrared Radiation

LED lamps are expected to not reach a level of infrared radiation where marking or other safety measures are required. They do not require measurement.

17 VERIFICATION

17.1 Type Test

The *Min* sampling size for type testing and the acceptance criteria shall be as given in Table 6. The sample shall be representative of a manufacturer's production:

Table 6 Sample Sizes for Type Tests
(*Clause* **17.1**)

Sl No.	Clause	Test*	No. of Samples	Max No. of failures
(1)	(2)	(3)	(4)	(5)
i)	5	Marking	5	0
ii)	6	Interchangeability	—	—
iii)	6.1	Cap interchangeability	5	2
iv)	6.2	Mass	2	
v)	6.3	Dimensions	5	
vi)	6.4	Temperature	2	
vii)	6.5	Wrong starter Lamp combination	2	
viii)	7	Pin Safety during insertion	5	1
ix)	8.2	Protection against electric shock	5	1
x)	8.3 & 8.4	Insulation resistance and electric strength after humidity treatment	5	1
xi)	9	Mechanical Requirement for Caps	5	1
xii)	10	Cap temperature rise	2	0
xiii)	11	Resistance to heat	2	0
xiv)	12	Resistance to flame and ignition	2	0
xv)	13	Fault conditions	1 each	0
xvi)	14	Creepage distances and clearances	2	0
xvii)	15	Protection against dust and moisture	2	0
viii)	16	Photobiological Safety#	—	—
		TOTAL	20	4

*Tests shall be carried out in the sequence given in the table.
#In case applicable, the total number of samples shall be 5 and *Max* number of units that are allowed to fail shall be 0.

NOTE— @Samples from non-destructive tests (e.g. marking, weight etc.) can be used for other tests.

17.2 Acceptance Test

The *Min* sampling size for acceptance testing and the acceptance criteria shall be as given in Table 7:

Table 7 Sample Size for Acceptance Tests
(*Clause* **17.2**)

Sl No.	Clause	Test	No. of Samples	Max No. of failures
(1)	(2)	(3)	(4)	(5)
i)	5	Marking	5	0
ii)	6	Interchangeability	—	—
iii)	6.1	Cap interchangeability	5	2
iv)	6.2	Mass	2	
v)	7	Pin Safety during insertion	2	0
vi)	8.2	Protection against electric shock	5	1
vii)	8.3 & 8.4	Insulation resistance and electric strength after humidity treatment	5	1
viii)	9	Mechanical Requirement for Caps	5	1
ix)	10	Cap temperature rise	2	0
		Total	15	2

NOTE— Samples from non-destructive tests (e.g. marking, weight etc.) can be used for other tests.

17.3 Accidentally Broken and/or Incorrectly Operated Lamps

Lamps, which are accidentally broken, shall, when necessary, be replaced to ensure that the required number of lamps complete the test. Any such broken or incorrectly operated lamps shall be neglected in the evaluation of test results.

NOTE— In order to avoid unnecessary delay, it is recommended that spare lamps be available for carrying out tests of this standard.

18 TESTS

18.1 Classification of Tests

18.1.1 *Type Tests*

a) Marking (*see* **5**);
b) Cap interchangeability (*see* **6.1**);
c) Mass (*see* **6.2**);
d) Dimensions (*see* **6.3**);
e) Temperature (*see* **6.4**);
f) Wrong starter Lamp combination (*see* **6.5**);
g) Pin Safety during insertion (*see* **7**);
h) Protection against electric shock (*see* **8.2**);
i) Insulation resistance and electric strength after humidity treatment (*see* **8.3** & **8.4**);
j) Mechanical Requirement for Caps (*see* **9**);
k) Cap temperature rise (*see* **10**);
l) Resistance to heat (*see* **11**);
m) Resistance to flame and ignition (*see* **12**);
n) Fault conditions (*see* **13**);
o) Creepage distances and clearances (*see* **14**);
p) Protection against dust and moisture (*see* **15**); and
q) Photobiological Safety# (*see* **16**);

18.1.2 *Acceptance Tests*

a) Marking (*see* **5**);
b) Cap interchangeability (*see* **6.1**);
c) Mass (*see* **6.2**);
d) Pin Safety during insertion (*see* **7**);
e) Protection against electric shock (*see* **8.2**);
f) Insulation resistance and electric strength after humidity treatment (*see* **8.3** & **8.4**);
g) Mechanical Requirement for Caps (*see* **9**);
h) Cap temperature rise (*see* **10**);

18.1.3 *Conditions of Compliance*

A product or a batch shall be considered as conforming to this standard, if the requirements contained in this standard are fulfilled. If the product or batch fails to satisfy any of these requirements, it shall be deemed not to comply with this standard.

For a product to pass a Type test, the *Max* allowable number of failures for each test and all tests put together, is listed in Table 6.

A batch shall be considered to comply, if the number of lamps failing does not exceed qualifying limits given in Table 7.

ANNEX A
(*Clause* **1**)

CONFORMITY TESTING DURING MANUFACTURE

A.1 BACKGROUND AND RECOMMENDED PROCEDURE

The tests specified in this Annex should be carried out by the manufacturer on each LED lamp after production and are intended to reveal, as far as safety is concerned, unacceptable variations in material and manufacture. These tests are intended not to impair the properties and the reliability of the LED lamp and they may vary from certain type tests in the standard by lower voltages used.

More tests may have to be conducted to ensure that every LED lamp conforms with the sample approved under the type test to this specification. The manufacturer should determine these tests from their experience.

Within the framework of the quality manual, the manufacturer may vary this test procedure and its values to one better suited to their production arrangements and may make certain tests at an appropriate stage during manufacture, provided it can be proved that at least the same degree of safety is ensured as specified in this Annex.

A.2 TESTING

Electrical tests should be conducted on 100 % of all units produced as scheduled in Table A.1. Insulation resistance and electrical strength test may select a *Min* of 3 pcs per batch to perform or as defined by the manufacturer's quality plan. Failed products are to be quarantined for scrap or re-working.

Visual inspections should take place to ensure the following:

a) All specified labels are securely in place and printing is legible; and
b) Manufacturer instructions are packed with the lamp, where necessary.

Table A.1 Minimum Values for Electrical Tests
(*Clause* **A.1**)

Sl. No	Test	Test details
(1)	(2)	(3)
i)	Function Test	Check for lamp operation at normal operating voltage

ii)	Electric Strength	a) Checked between lamp pins and lamp cap: i) *Max* breakdown current 5mA ii) Measured by applying a *Min* voltage of 1.5 kV a.c. or 1.5 √2 kV d.c. for a *Min* of 1 s b) Checked between lamp pins and other conductive parts of the lamp: i) *Max* breakdown current 5mA [a)] ii) Measured by applying a *Min* voltage of 3 kV a.c. or 3 √2 kV d.c. for a *Min* of 1 s
	or	or
	Insulation Resistance	1) Checked between lamp pins and the conductive part of lamp cap: i) *Min* resistance 2 MΩ ii) Measured by applying 500 V d.c. for 1 s 2) Checked between lamp pins and other conductive part of the lamp: i) *Min* resistance 4 MΩ ii) Measured by applying 500 V d.c. for 1 s

a) The value of 5 mA is suggested, but can be changed by the lamp manufacturer.